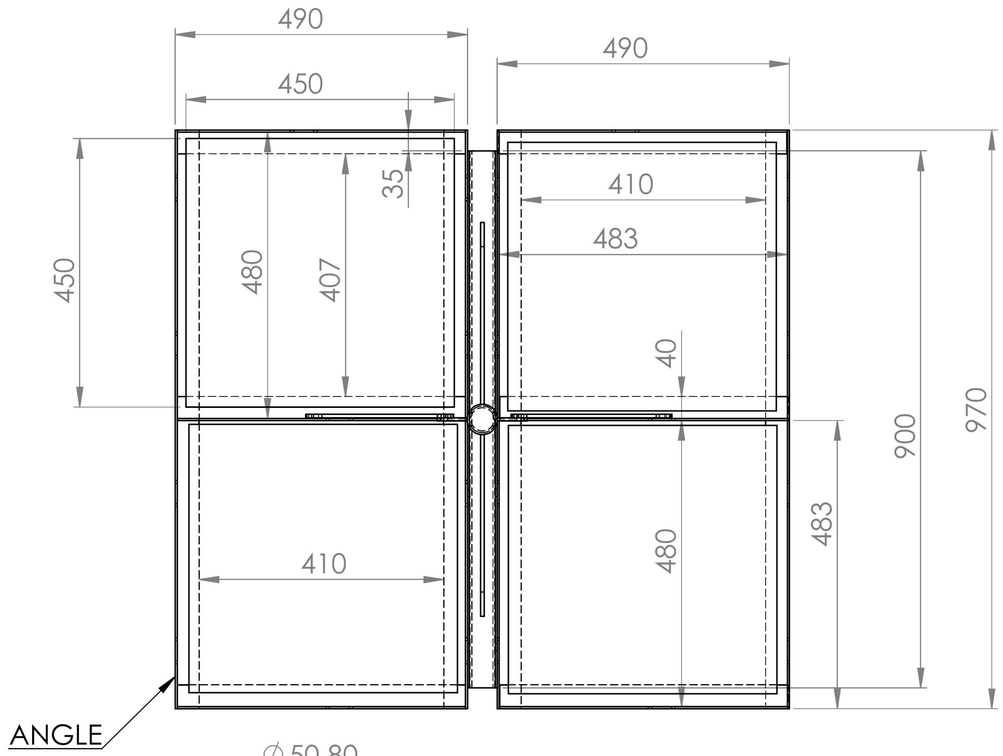

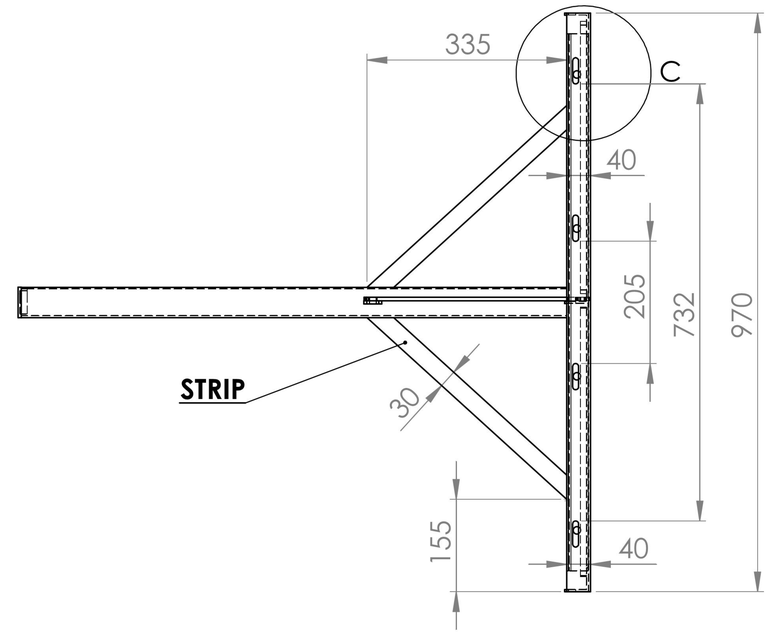

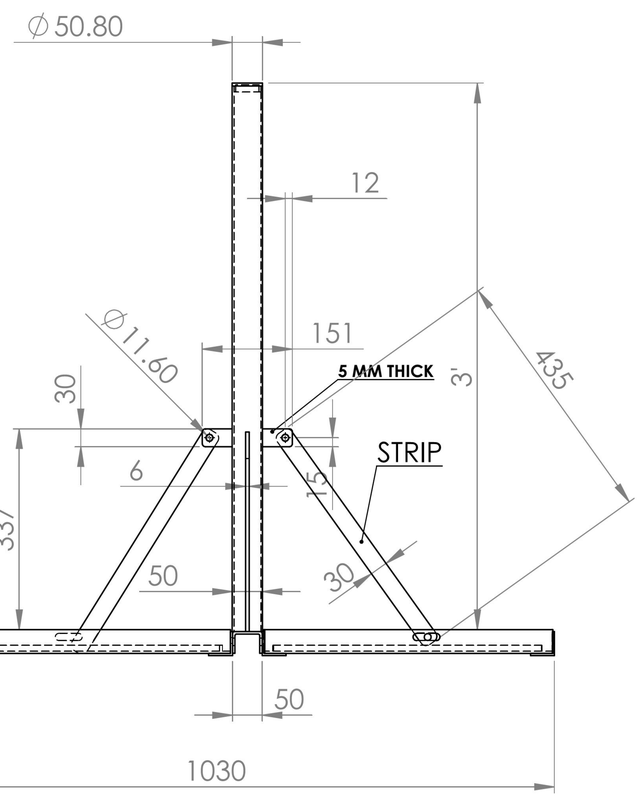

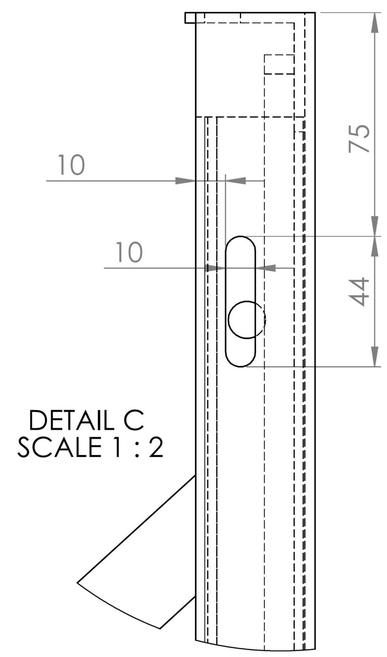

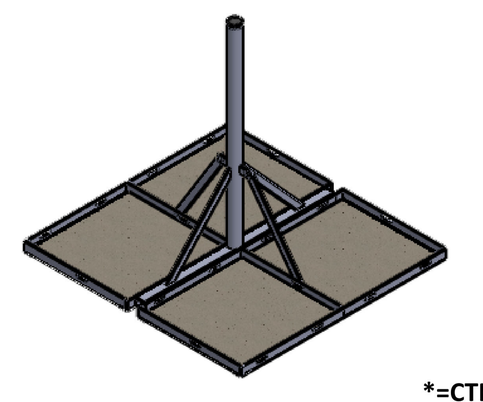

*=CTF

		UNLESS OTHERWISE SPECIFIED:		NAME	DATE
		All Dimension in m.m.	DRAWN	VISHWA	15/10/14
			CHECKED	Gyan	15/10/14
			ENG APPR.	Rakesh	15/10/14
			MFG APPR.	Rakesh	15/10/14
			Q.A.	KRISHNA	15/10/14
		MATERIAL M.S.			
NEXT ASSY	USED ON	FINISH H.D.G.			
APPLICATION		DO NOT SCALE DRAWING			

MODEL **2572**

TITLE:

ALL TRADE 2"X36' NPRM

SIZE	DWG. NO.	REV
B		0

SCALE: 1:20 | SHEET 1 OF 1