18 mm Split Silicone Cable Entry Grommet

Split-entry cable pass-through for Starlink, Ethernet, TV/coax and other low-voltage cabling



KEY FEATURES

- **Split-entry design** - fits around an existing cable without removing the connector.
- Ribbed body - helps retain the grommet in the drilled opening.
- Flexible white silicone - durable and suitable for indoor or outdoor cable-entry applications.
- Approx. 7.44 mm cable passage - suitable for common Starlink, Ethernet and TV/coax cable diameters.
- 18 mm drilled-hole fit - provides a neat finished edge and cable protection.

PRODUCT OVERVIEW

A split silicone wall grommet for routing pre-terminated or unterminated low-voltage cables through walls, panels and enclosures. The longitudinal split allows fitting after the cable has been installed, while the ribbed body grips the opening and the flange provides a clean finish.

DIMENSIONS

Approximate measurements from supplied sample

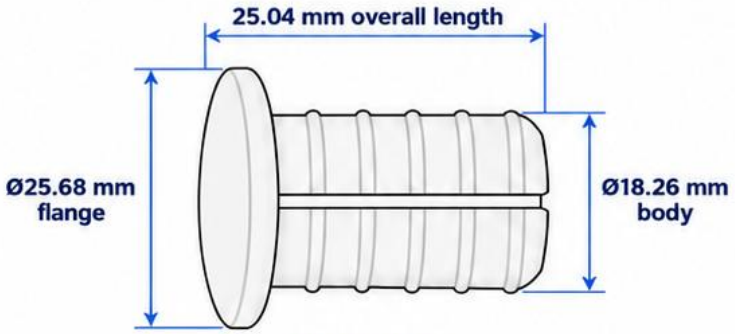

SIDE VIEW

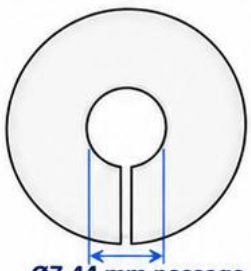

FRONT VIEW

Recommended drilled hole
Ø18 mm
for a tight fit

Dimensions are approximate and based on the supplied sample photographs.

TECHNICAL SPECIFICATION

Property	Specification
Type	Split cable-entry grommet
Material	Flexible silicone
Colour	White
Recommended hole	Ø 18 mm
Body diameter*	Ø 18.26 mm
Flange diameter*	Ø 25.68 mm
Cable passage*	Ø 7.44 mm
Overall length*	25.04 mm
Installation	Push-fit / split-entry

APPLICATIONS & INSTALLATION

Typical applications

- Starlink cable entry
- Ethernet / network cabling
- TV and coaxial cables
- General low-voltage cable management

Installation

- Drill a clean 18 mm opening.
- Open the split and position around the cable.
- Compress and push the ribbed body into the hole until the flange sits flush.
- Check the cable is not pinched and the grommet is fully seated.